0.1 Source Shifting & Transformation Techniques

1 Use source shifting and transformation techniques to find voltage across 2 Ω resistor as shown in Figure 1

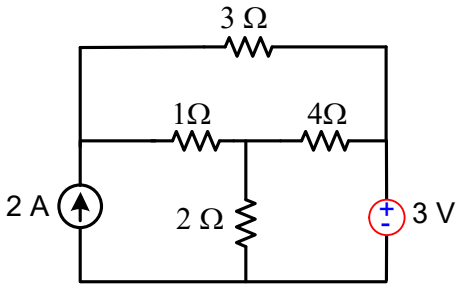

Figure 1: 2018-DEC

Solution:

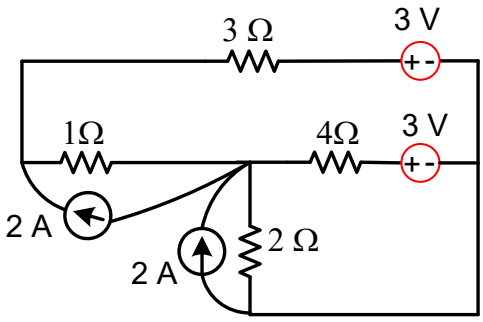

Figure 2

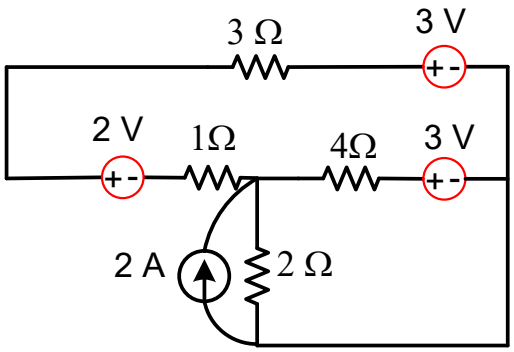

Figure 3

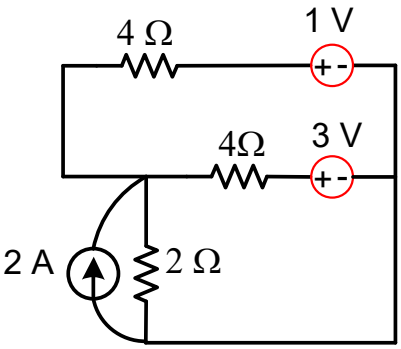

Figure 4

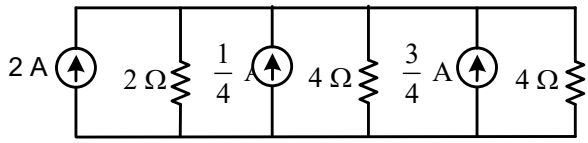

Figure 5

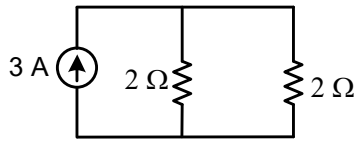

Figure 6

The voltage across 2 Ω resistor is

$$I = 3\frac{2}{2+2} = 1.5\ A$$
$$V = 1.5 \times 2 = 3V$$

2 Use source shifting and transformation techniques to find voltage across a, b resistor as shown in Figure 7

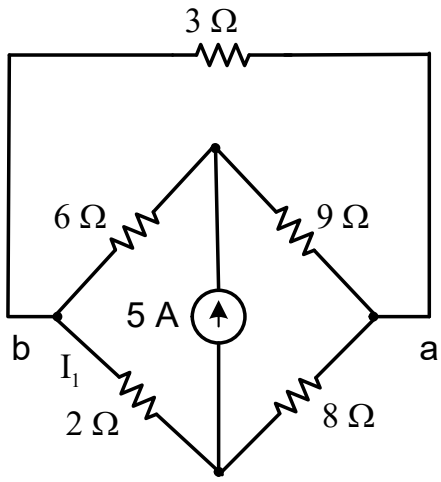

Figure 7: 2018-DEC

Solution:

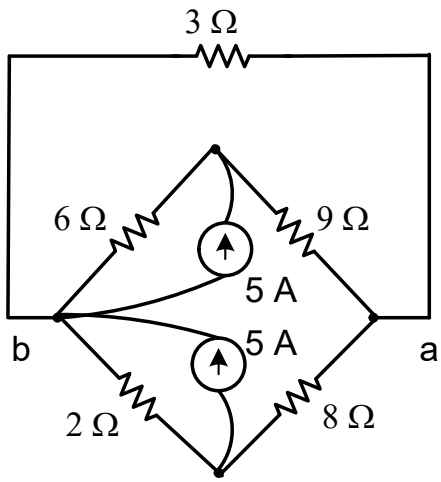

Figure 8

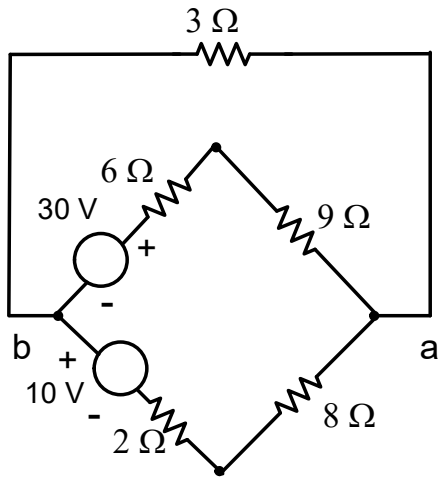

Figure 9

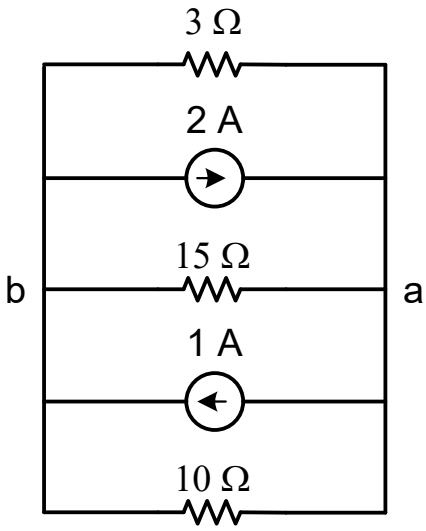

Figure 10

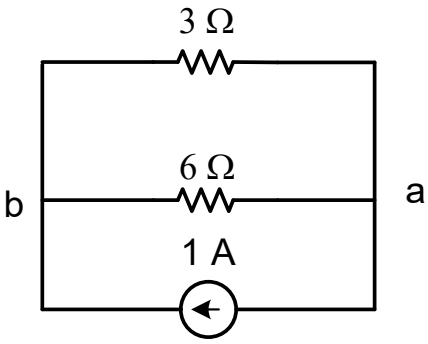

Figure 11

The voltage across $a,\ b$ resistor is

$$
\begin{aligned}
I &= 1\frac{3}{6+3} = 0.3333\ A \\
V &= 0.3333 \times 6 = 2V
\end{aligned}
$$

3 Use source shifting and transformation techniques to find voltage across $a,\ b$ resistor as shown in Figure 12

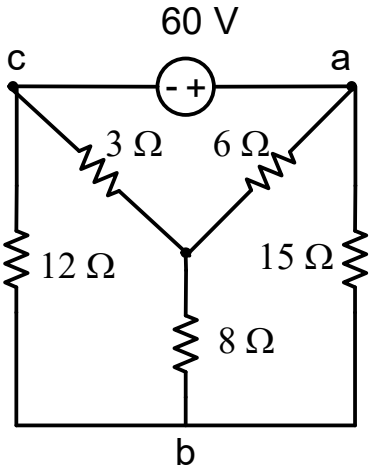

Figure 12: 2018-DEC

Solution:

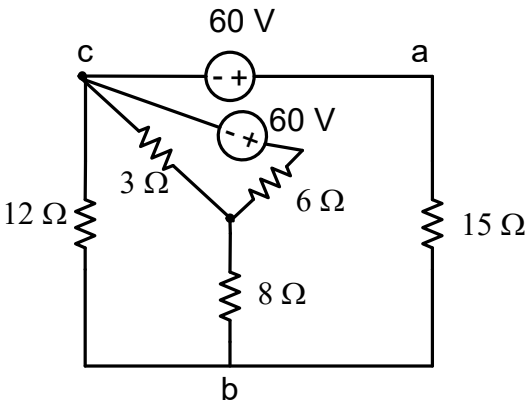

Figure 13

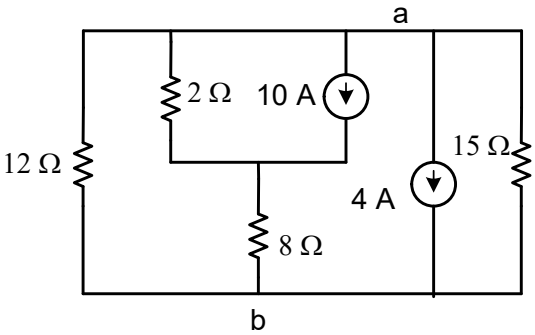

Figure 14

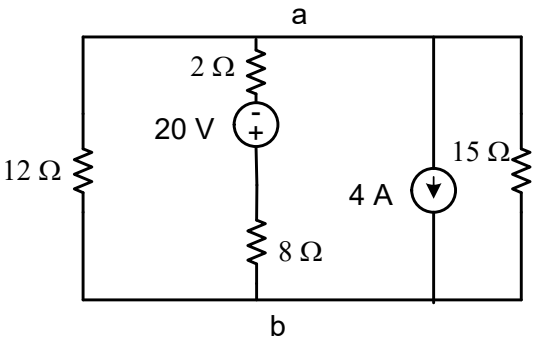

Figure 15

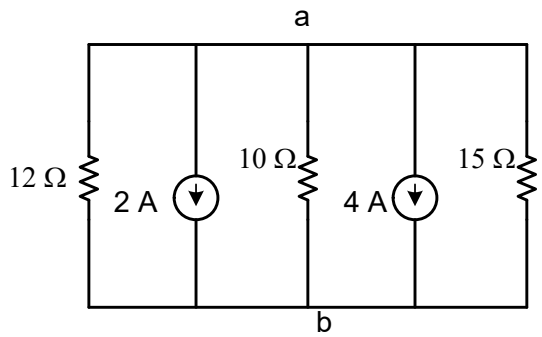

Figure 16

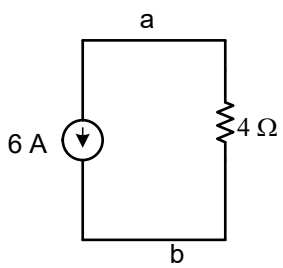

The voltage across a, b resistor is

$$V = 6 \times 4 = 24V$$

4 Use source shifting and transformation techniques to find voltage across a, b resistor as shown in Figure 12

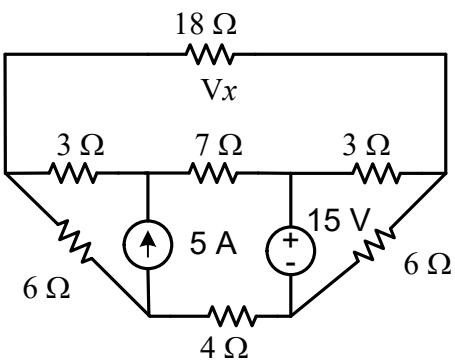

Solution:

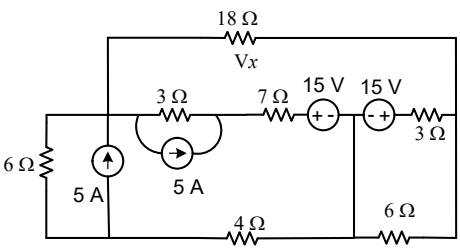

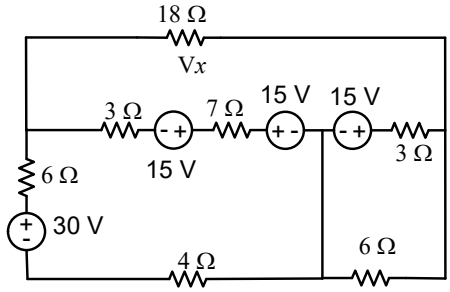

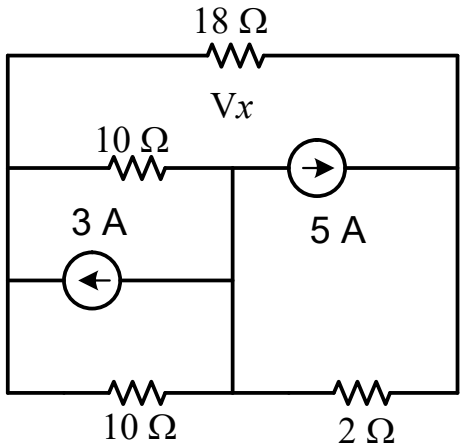

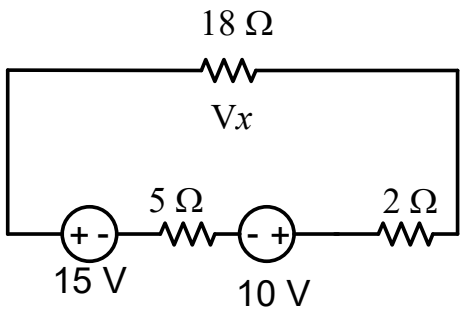

The voltage across 18Ω resistor is

$$i = \frac{5}{25} = 0.2A$$
$$V = 0.2 \times 15 = 3.6V$$

DEC 2018 (2017 scheme) DEC 2018 (2015 scheme) 1 a) Reduce the network shown in Figure 17 to a single voltage source in series with a resistance using source shift and source transformations..

Solution:

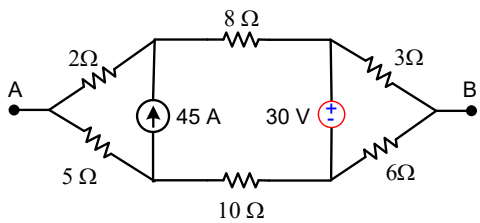

Figure 17: 2018-DEC

The modified circuit diagram is as shown in Figure 18 by shifting the voltage and current sources.

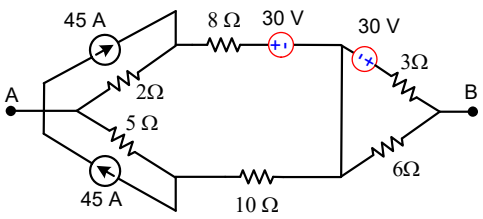

Figure 18

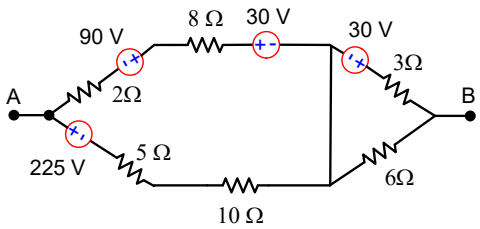

Figure 19

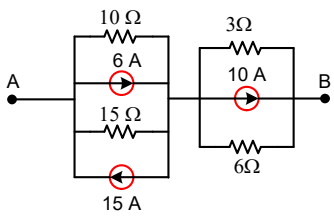

Figure 20

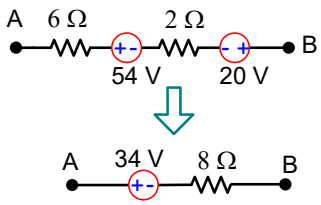

Figure 21

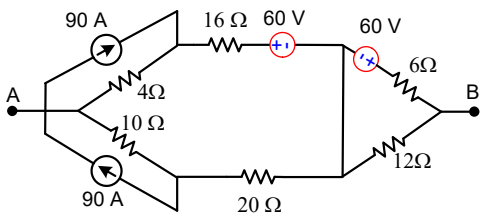

Figure 23

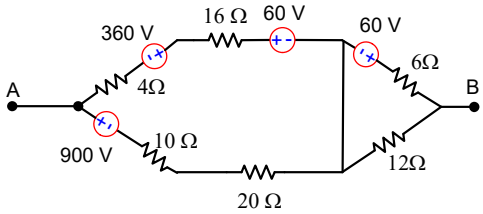

Figure 24

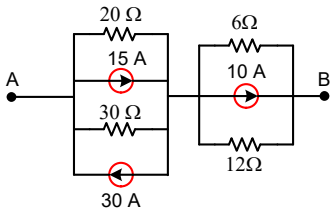

Figure 25

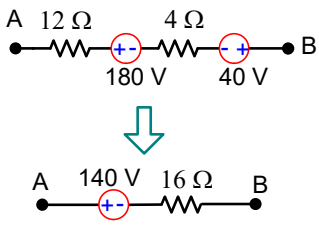

Figure 26

Aug 2020 (2018 scheme EE) 2 c) Apply source transformation and shifting method to reduce the network shown in Figure 22 to a single voltage source in series with a resistance.

Solution:

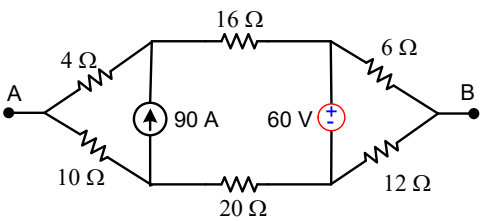

Figure 22: 2018-DEC

Aug 2020 (2018 scheme EE) 2 c) Apply source transformation and shifting method to reduce the network shown in Figure 27 to a single voltage source in series with a resistance.

Solution:

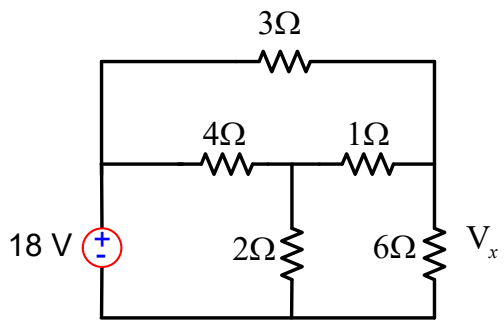

Figure 27: 2018-DEC

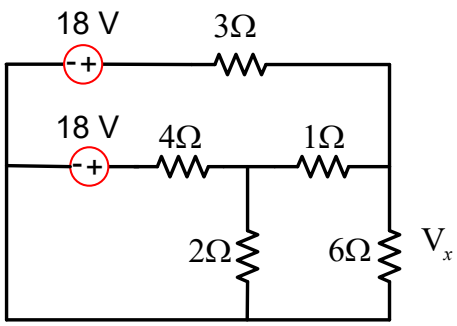

Figure 28

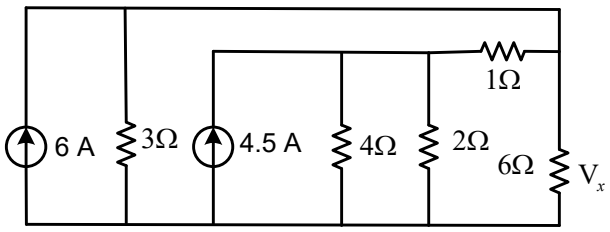

Figure 29

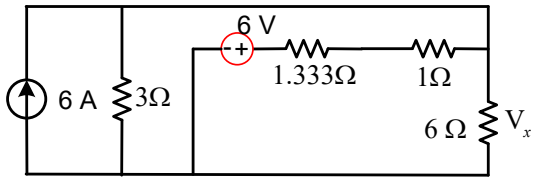

Figure 30

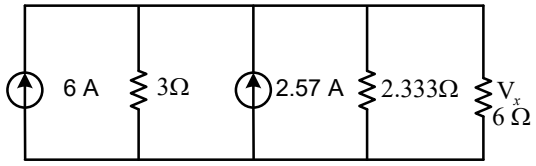

Figure 31

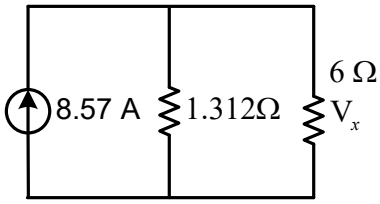

Figure 32

$$I = 8.57\frac{1.312}{1.312+7} = 1.352\ A$$